OPA FIX (SIN) PTE LTD
10 Kaki Bukit Road 1, #01-17 KB Industrial Building
Singapore 416175
Email:enquiry@askopafix.com
8522 9754

HERCULES A SERIES PUMP

Features :

Series is designed according to the Principles of hydraulics. Its motor is with external ventilation design, and the winding design is advanced. Liquids part is made of high reinforce engineering plastic which is durable. The strainer with high capacity helps reducing the cleaning work. It is with good performance and high efficiency. It accelerates water injection {irrigation} rate and improves energy efficiency. It is applicable to: swimming pool, industrial water, oceans pavilion, water park, etc.



Model	Voltage V	Power KW	Power HP	Hmax (m)	Qmax (m^3/h)	Port Size (mm)	Motor Speed (r/min)	NW (kg)	CW (kg)
AKP - 075	220V/50HZ	0.55	0.75	17	20	2"	2850	19	21
AKP - 100	220V/50HZ	0.75	1	17	25	2"	2850	19	21
AKP - 150	220V/50HZ	1.1	1.5	17	28	2"	2850	19.5	22
AKP - 200	220V/50HZ	1.5	2	19	32	2"	2850	20.8	23.8
AKP - 300	220V/380V/50HZ	2.2	3	21	36	2"	2850	22	24.5

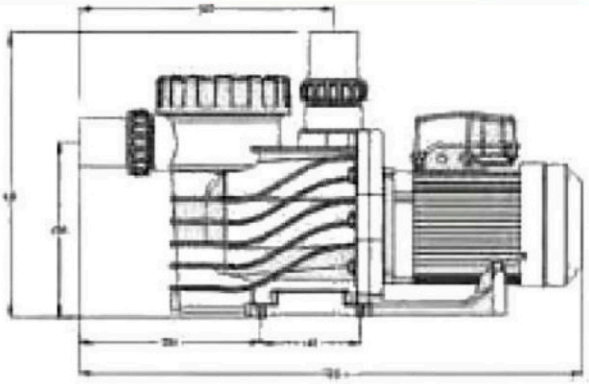

QH. Curve of The Pump

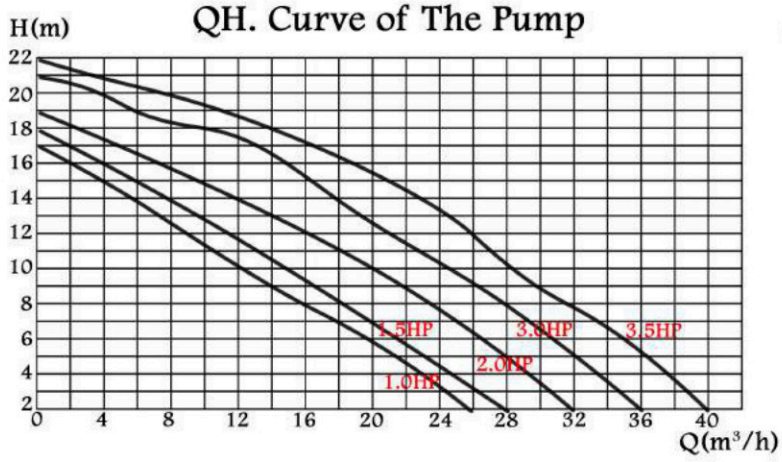

OPA FIX (SIN) PTE LTD
10 Kaki Bukit Road 1, #01-17 KB Industrial Building
Singapore 416175
Email:enquiry@askopafix.com
8522 9754

HERCULES B SERIES PUMP

Features :

- Anti-rust crust can stop water penetrating the engine.
- Enough power, high head, big flux and high efficient circulation.
- Smaller noise and run quietly.
- The pump cover bears high airtight preventing the leaking.
- The main part of the pump is made of special plastic which is anti-high or low temperature so it is durable.
- Convenient to handle, easy to maintain, with the supplying of spare parts.



Model	Voltage V	Power KW	Power HP	Hmax (m)	Qmax (m^3/h)	Port Size (mm)
B Series - 150	220V/380V/50HZ	1.1	1.5	18	30	2"
B Series - 200	220V/380V/50HZ	1.5	2	19	35	2"
B Series - 300	220V/380V/50HZ	2.3	3	20	38	2"
B Series - 400	220V/380V/50HZ	3	4	22	48	2"

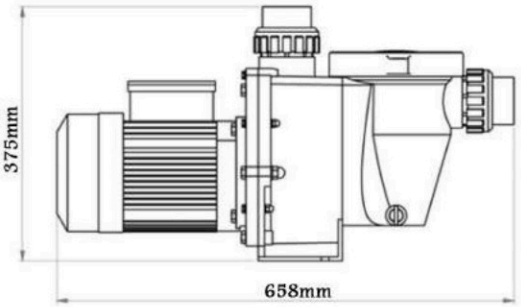

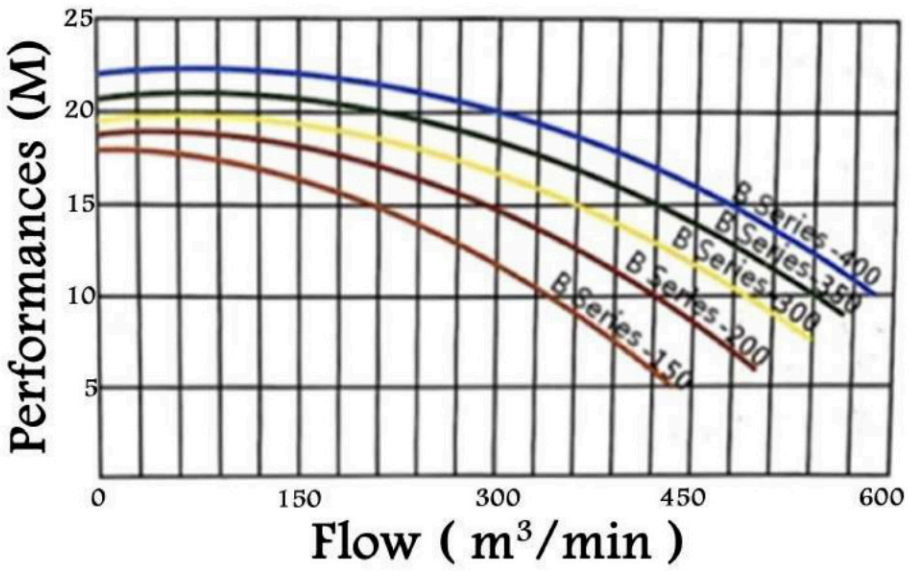

OPA FIX (SIN) PTE LTD
10 Kaki Bukit Road 1, #01-17 KB Industrial Building
Singapore 416175
Email:enquiry@askopafix.com
8522 9754

HERCULES S SERIES PUMP

Features :

- Anti-rust crust can stop water penetrating the engine.
- Enough power, high head, big flux and high efficient circulation.
- Smaller noise and run quietly.
- The pump cover bears high airtight preventing the leaking.
- The main part of the pump is made of special plastic which is anti-high or low temperature so it is durable.
- Convenient to handle, easy to maintain, with the supplying of spare parts.



Model	Voltage V	Power KW	Power HP	Hmax (m)	Qmax (m^3/h)	Port Size (mm)
S Series - 370	220V/380V/50HZ	0.37	0.5	8	11	1.5"
S Series - 550	220V/380V/50HZ	0.55	0.75	12	16	1.5"
S Series - 750	220V/380V/50HZ	0.75	1	13	17	1.5"

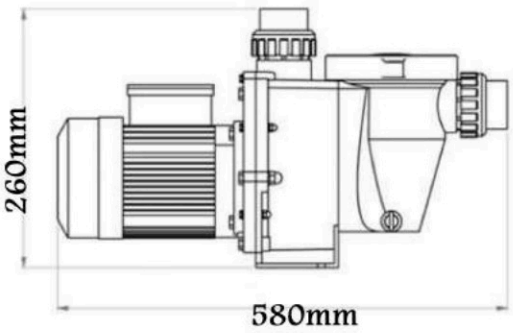

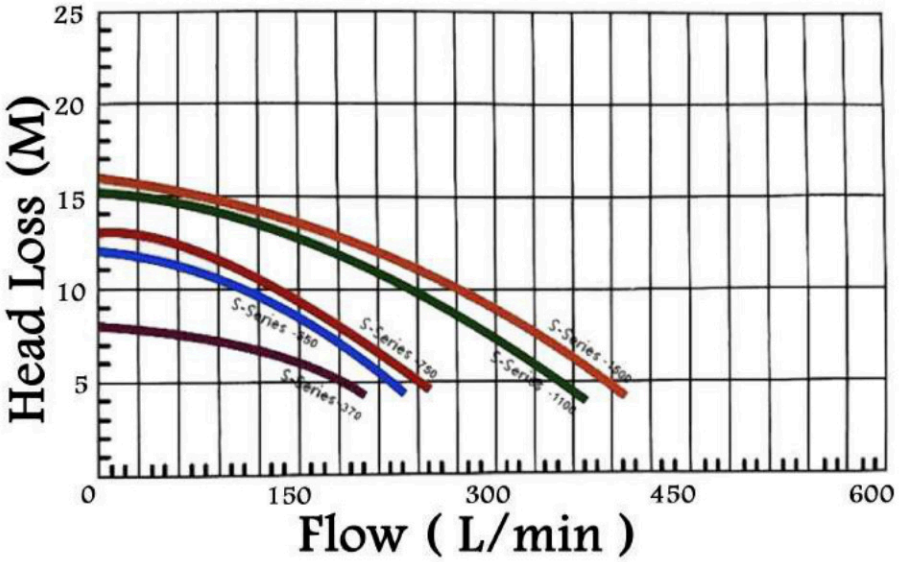

OPA FIX (SIN) PTE LTD
10 Kaki Bukit Road 1, #01-17 KB Industrial Building
Singapore 416175
Email:enquiry@askopafix.com
8522 9754

HERCULES B Pro SERIES PUMP

Anti-rush crust can stop water penetrating the engine. Enough power, hidh head, big flux and high efficient circulation. Smaller noise and run quietly. The pump cover bears high airtight preventing the leaking. The main part of the pump is made of special plastic which is anti-high or low temperature so it ir durable. Convenient to handla, easy to maintain, with the suplying of spare parts.



Model	Voltage V	Power KW	Power HP	Hmax (m)	Qmax (m^3/h)	Port Size (mm)
B Pro Series - 40	220V/380V/50HZ	3	4	18	48	3"
B Pro Series - 55	220V/380V/50HZ	4	5.5	19	60	3"
B Pro Series - 75	220V/380V/50HZ	5.5	7.5	20	80	3"
B Pro Series - 100	220V/380V/50HZ	7.5	10	21	95	3"
B Pro Series - 150	380V/50HZ	11	15	22	110	3"

