OPA FIX (SIN) PTE LTD
10 Kaki Bukit Road 1, #01-17 KB Industrial Building
Singapore 416175
Email:enquiry@askopafix.com
8522 9754



ATHENA SMALL SKIMMER BOX

Code/Model	:	606-A-OF606002/SV-1096
Color	:	White
Material	:	ABS
Description	:	9.5L Standard Wall Skimmer

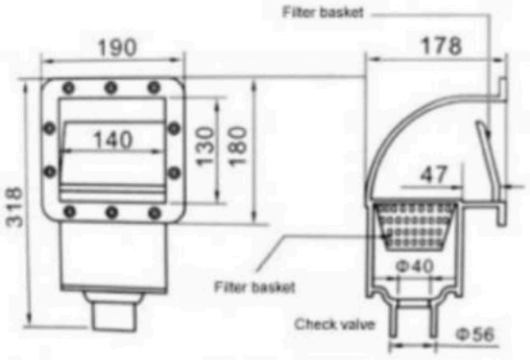

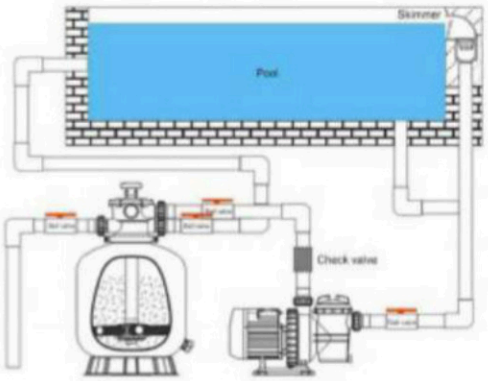



ATHENA 15M SKIMMER WITH SQUARE FRAME AND ROUND LID FOR CONCRETE POOL

Code/Model	:	606-A-OF606001/91002
Color	:	White
Material	:	ABS
Description	:	



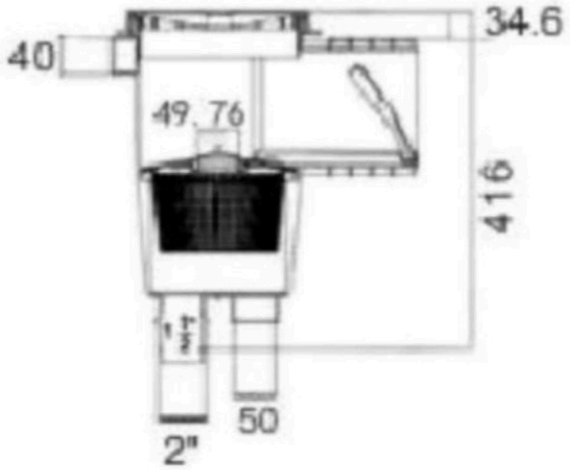

OPA FIX (SIN) PTE LTD
10 Kaki Bukit Road 1, #01-17 KB Industrial Building
Singapore 416175
Email:enquiry@askopafix.com
8522 9754



ATHENA SKIMMER FOR LINER POOL

Code/Model	:	606-A-OF606006/91001
Color	:	White
Material	:	ABS
Description	:	Float valve provides a main drain thru skimmer system with an automatic

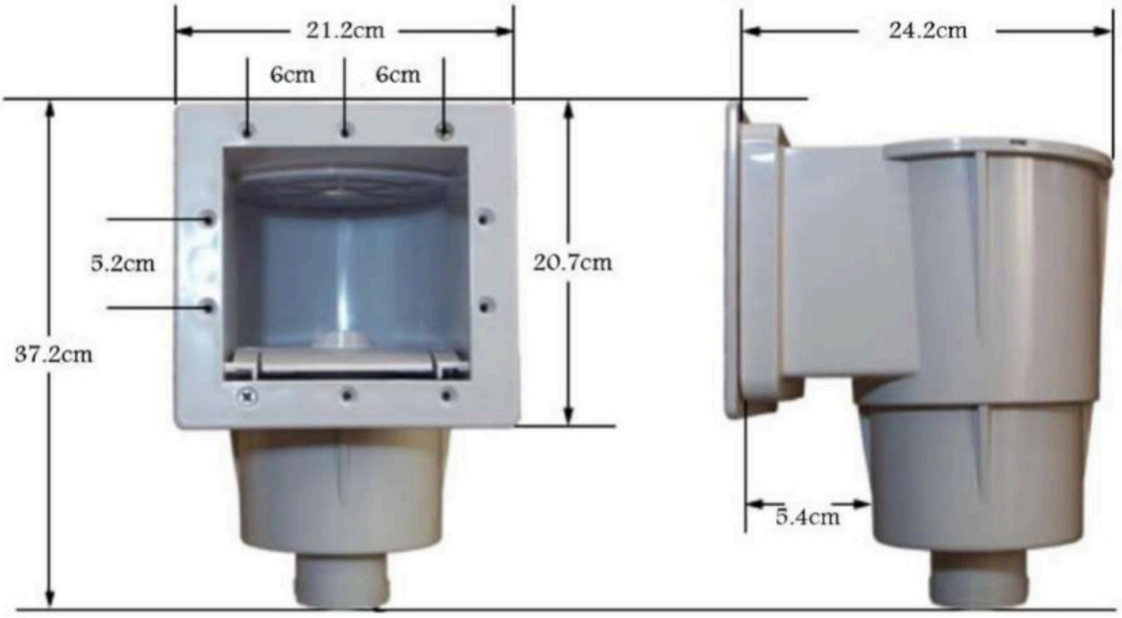

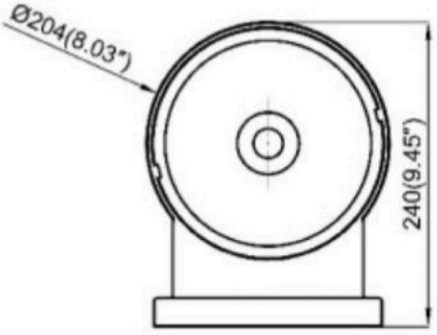

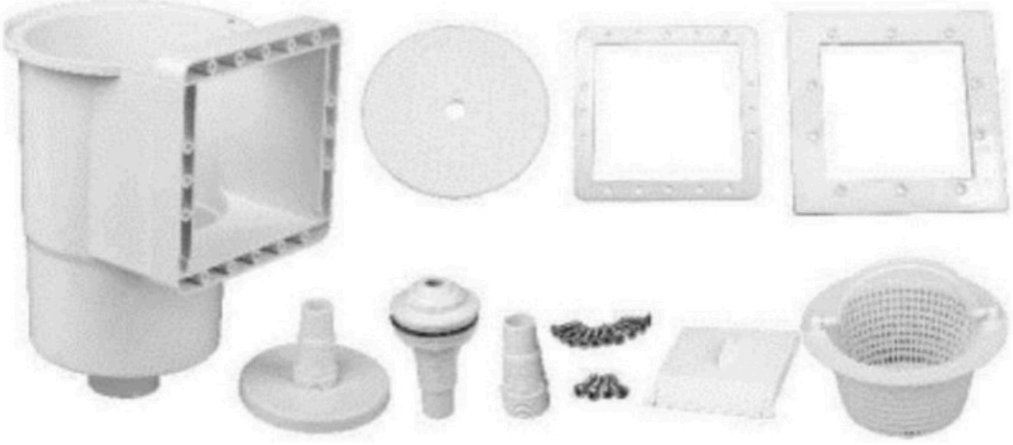

OPA FIX (SIN) PTE LTD
10 Kaki Bukit Road 1, #01-17 KB Industrial Building
Singapore 416175
Email:enquiry@askopafix.com
8522 9754

ATHENA SKIMMER FOR LINER POOL | OF606008

Code/Model	:	606-A-OF606008
Color	:	White
Material	:	ABS
Description	:	Can be used for residential and commercial swimming pools suitable for concrete, fiberglass and vinyl surfaces









OPA FIX (SIN) PTE LTD
10 Kaki Bukit Road 1, #01-17 KB Industrial Building
Singapore 416175
Email:enquiry@askopafix.com
8522 9754



ATHENA 15M SKIMMER W/ SQUARE FRAME AND ROUND LID FOR VINYL POOL

Code/Model	:	606-A-OF606003/91003
Color	:	White
Material	:	ABS
Description	:	Float valve provides a main drain thru skimmer system with an automatic

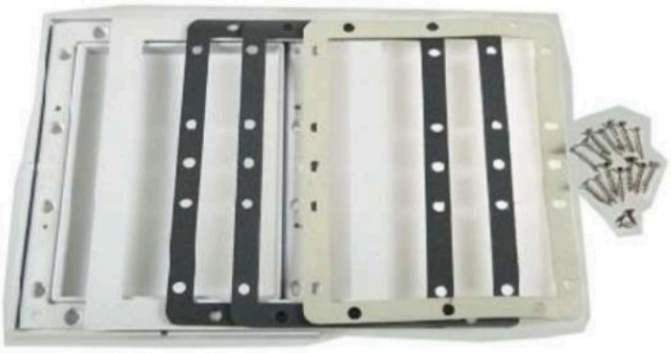

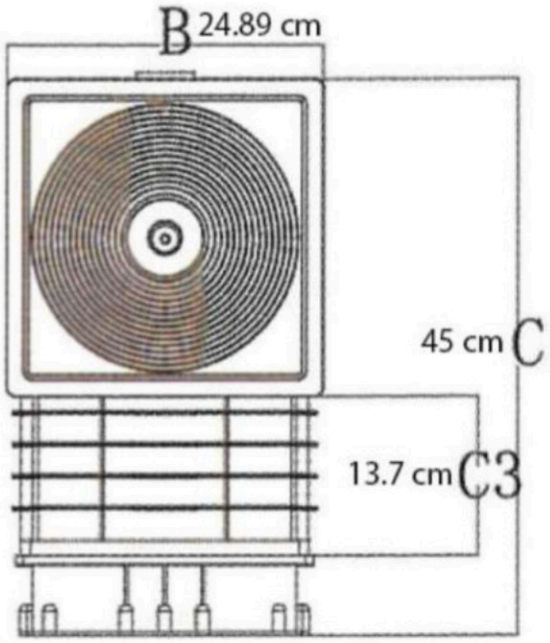

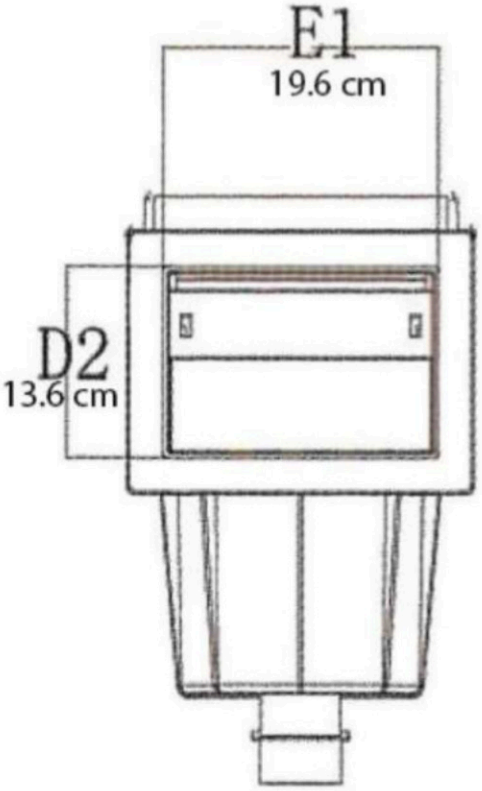

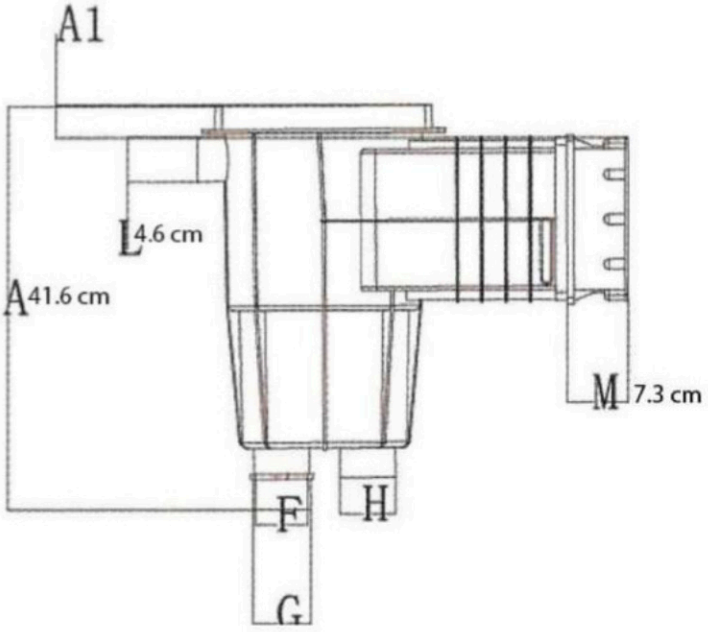

OPA FIX (SIN) PTE LTD
10 Kaki Bukit Road 1, #01-17 KB Industrial Building
Singapore 416175
Email:enquiry@askopafix.com
8522 9754



HAYWARD SKIMMER SKIM MASTER

Code/Model	:	SP10712SQ
Color	:	White
Material	:	PVC
Pipe Size	:	2 in
Description	:	The highest flow ratings in the industry at 75 gpm



HAYWARD SKIMMER DYNA SKIM ABOVE GROUND

Model	:	SP1091WM
Color	:	White
Material	:	PVC
Dimmensions	:	1 1/2 in
Description	:	Top and front basket access, one piece body construction



BESTWAY SKIMMER FLOWCLEAR POOL

Code/Model	:	606-A-OF606005/B012MFMNFA
Color	:	White
Material	:	Plastic
Dimmensions	:	19.29 x 8.11 x 25.2 inches
Description	:	Compatible with flow rate pumps of 800 gal/hr. or more

