OPA FIX (SIN) PTE LTD
10 Kaki Bukit Road 1, #01-17 KB Industrial Building
Singapore 416175
Email:enquiry@askopafix.com
8522 9754

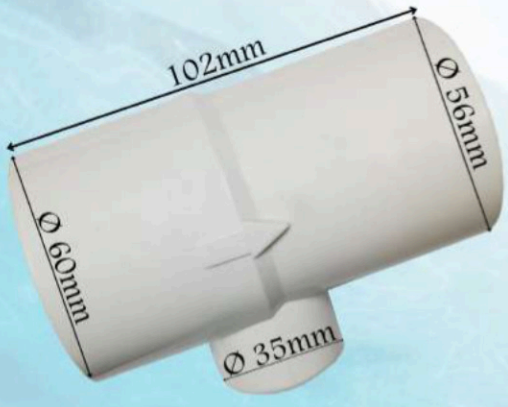

Athena Short Gunite Venturi Tee



Athena Complete Return Inlet

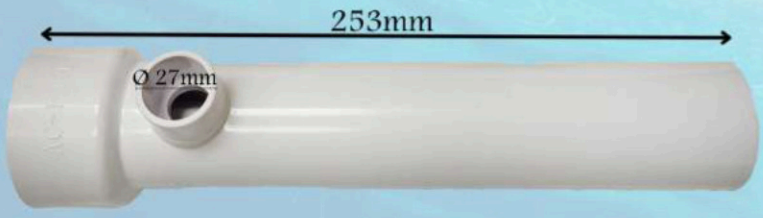

Athena Long Gunite Venturi Tee



Athena White Gunite Venturi Tee Cover

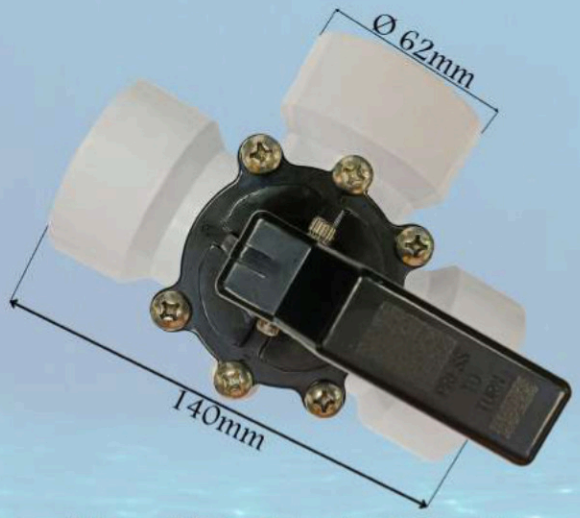

Athena 3 Way Valve (3x1.5" with Inner Screw)



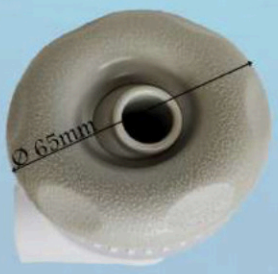

Athena Spa Jet Stering White Greyish





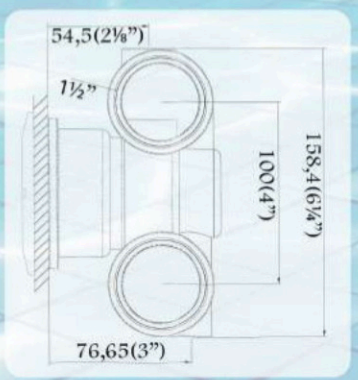

Athena Hydrotherapy Fitting

OPA FIX (SIN) PTE LTD
10 Kaki Bukit Road 1, #01-17 KB Industrial Building
Singapore 416175
Email:enquiry@askopafix.com
8522 9754




Floor Inlet (White)




Floor Inlet (Black)



Athena Face Plate



Floor Inlet Cover



Big Vacuum Cover



Octopus Tube Set



Hayward SP1419E White 1Inch Opening Hydrostream



Hayward SP1419C White 0.5 Inch Opening Hydrostream



Pentair 3/4" eyeball fitting 540042



Hayward SP1022 Receptacles Vacuum Fittings for Concrete Pool

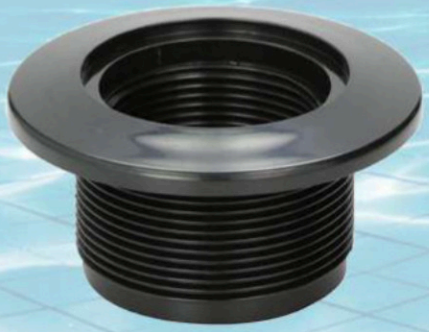

Hayward SP1022BLK 1-0.5Inch FIP Black Vacuum Fitting Concrete Pool Receptacle